Environmental Monitoring Systems

COMDE DERENDA

Weighing Systems

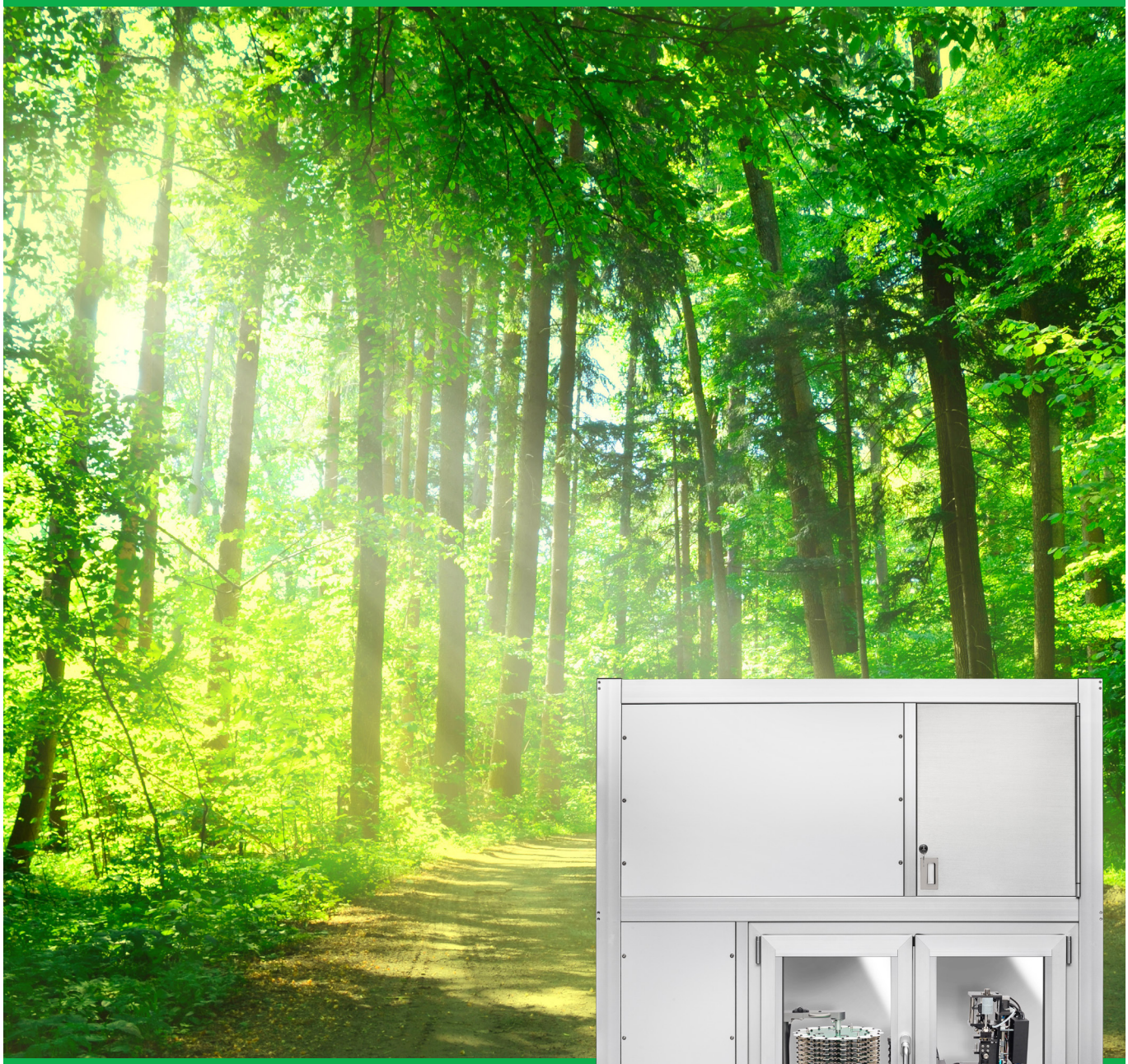

Automatic Weighing System
AWS-1

for Gravimetric Evaluation of
47 mm Sampling Filters

Phone: +49 3329 69027-10
Fax: +49 3329 69027-19

Comde-Derenda GmbH
Kieler Strasse 9, 14532 Stahnsdorf/Germany

info@comde-derenda.com
comde-derenda.com

Automatic Weighing System AWS-1

Automatic Weighing System with filter encoding/identification for gravimetric evaluation of sampling filters with a diameter of 47 mm

- **Precise, fully automated weighing system for Ø 47 mm filters**
- **Automatic data capture and documentation**
- **Dust-protected weighing chamber with FFU**
- **Prevents incorrect readings**
- **Reduces workload for lab technicians**
- **Filter encoding and identification (optional)**
- **Climate-controlled weighing chamber (optional)**
- **Ionization system (optional)**

The automatic weighing system AWS-1 weighs up to 320 suspended particulate matter (SPM) filters (diameter 47 mm) in an automated process according to EN 12341:2014 (PM_{10} and $PM_{2.5}$). The weighing results are recorded in a database along with relevant ancillary data, such as temperature and relative humidity. Automation contributes to the very high reliability and precision of both weighing and documentation. A weighing chamber with fan filter unit (FFU) and climate control unit (optional) maintains controlled, dust-protected conditions throughout the weighing process. Its modular design allows the system to be easily adapted to the customer‘s specific requirements.

Design

- Dust-protected weighing chamber with:
  - Filter magazine for holding filters before and after weighing (20 magazine discs with 16 positions each, total capacity 320 filters)
  - Carrier fork for transporting the filters within the system
  - Reference magazine for holding reference filters and reference weights
  - Fan filter unit (FFU) for contamination protection
  - Control panel for manual control of system components
  - Microbalance with draft shield (optional)
  - Coding station for filter encoding (optional)
  - Reading station for identification of encoded filters (optional)
  - Ionization system (optional)
  - Climate control unit (optional)
- PC with system software *AWS Control* (featuring custom encoding function for 47 mm filters)
- Power supply cabinet underneath the weighing chamber
- Side chamber for storing filter magazines

The AWS-1, being a modular system, is assembled with optional components according to the customer‘s individual requirements. All optional components are integrated into the main system and are fully compatible with the system‘s hardware and software. All components operate fully automatically within the system.

Operating Principle and Weighing Process

Before weighing takes place, the system settings and all parameters for the planned weighing job are entered in the PC, using the software *AWS Control*. Next, the unsampled filters are placed manually into the AWS-1 filter magazine.

The filters are then preconditioned, at preselected temperature and humidity values, in the closed weighing chamber for a user-specified period of time, e.g. according to EN 12341 for 48 hours.

To make the individual filters identifiable, their edges are punched with a code by the optional coding station.

The next step is the first weighing series, which consists of weighing the unsampled filters, usually with two weighing passes. All the selected filters are consecutively weighed once, and then for a second time.

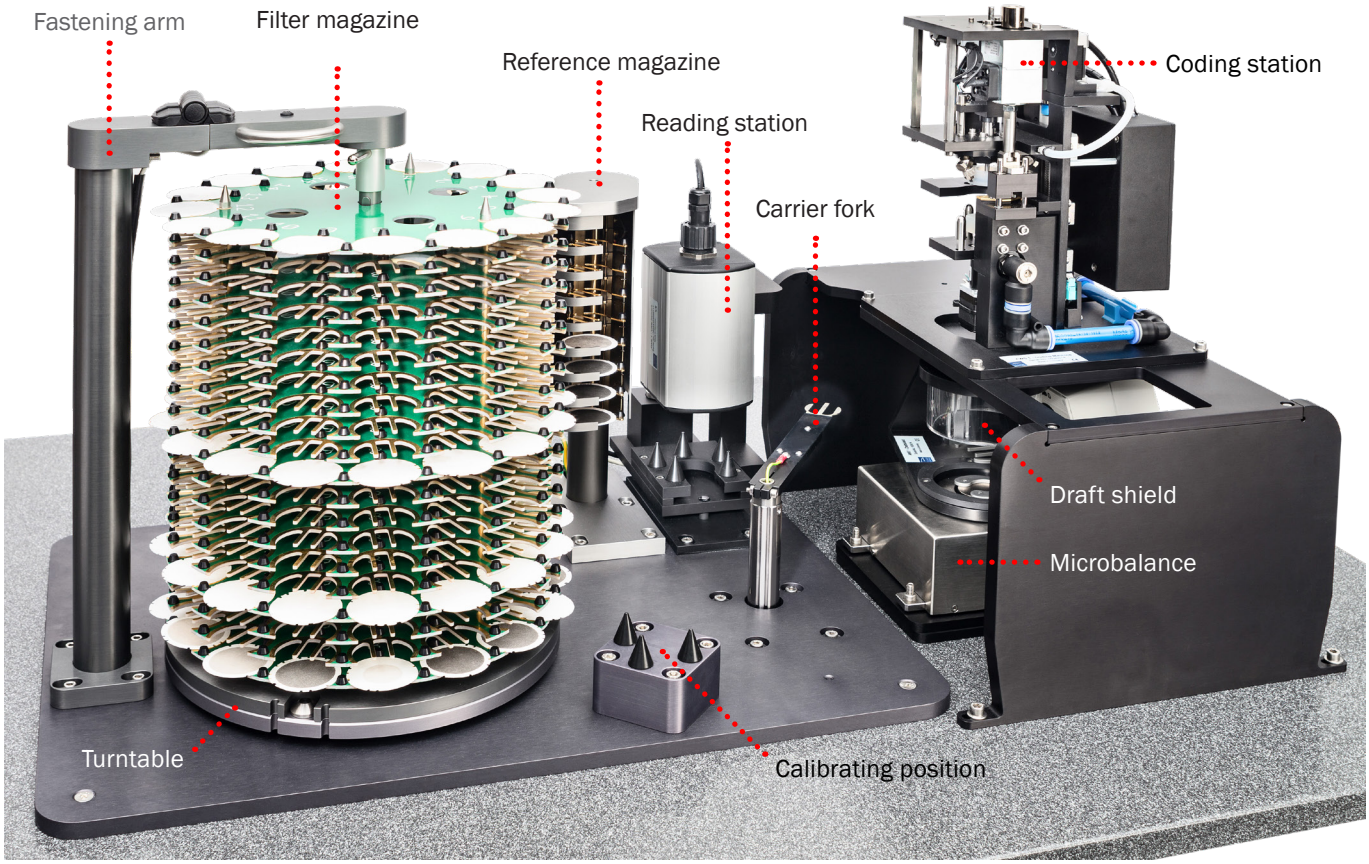

System components (figure without weighing chamber panels)

The optional ionization system neutralizes static electricity and thus enhances weighing accuracy. If discrepancies lying outside the specified tolerances are recorded between the first and second weighing passes, the relevant filters are weighed again in a third pass. The carrier fork automatically transports the filters between the system components (e.g. magazine → coding station → balance → magazine).
Once the unsampled filters have been weighed, they are placed in filter cartridges and installed in a SPM sampler or sampling system. Sampling then takes place according to EN 12341 – as a general rule, each filter is exposed to airborne SPM for 24 hours.

After sampling, the filters are returned to the filter magazine and conditioned once more. The second weighing series (weighing the sampled filters) follows, again with two or possibly three weighing passes. Previously encoded filters are identified by the reading station, which allows the sampled reading to be compared directly with the preceding unsampled reading. Both before and during the weighing series, verification weighing operations are performed with reference filters in order to monitor the conditions (regarding climatization and particle intrusion) inside the weighing chamber.

During the weighing operation, all data (weight values, mean values, weight difference between unsampled and sampled filters, and ancillary data, such as temperature and relative humidity) is saved in the database on the system PC.

The concentration of suspended particulate matter is calculated from the weight difference between the sampled and unsampled filters, taking into account the air flow rate during the sampling period.

The saved data can subsequently be exported for analysis and processing.

Benefits

Automatic Weighing System AWS-1

The gravimetric assessment of particulate samples prescribed by European regulations is mostly performed in laboratories by way of manual weighing procedures. Given that both unsampled and sampled filters have to be weighed several times in order to obtain a mean value, a large number of weighing operations is required. This monotonous, repetitive task places a considerable burden on laboratory technicians, and entails a relatively high risk of incorrect values being recorded during weighing and when results are transferred. The automated weighing operation performed by the AWS-1 in dust-protected, controlled conditions substantially alleviates manual strain, prevents weighing errors and delivers reliable, precise results.

System Components

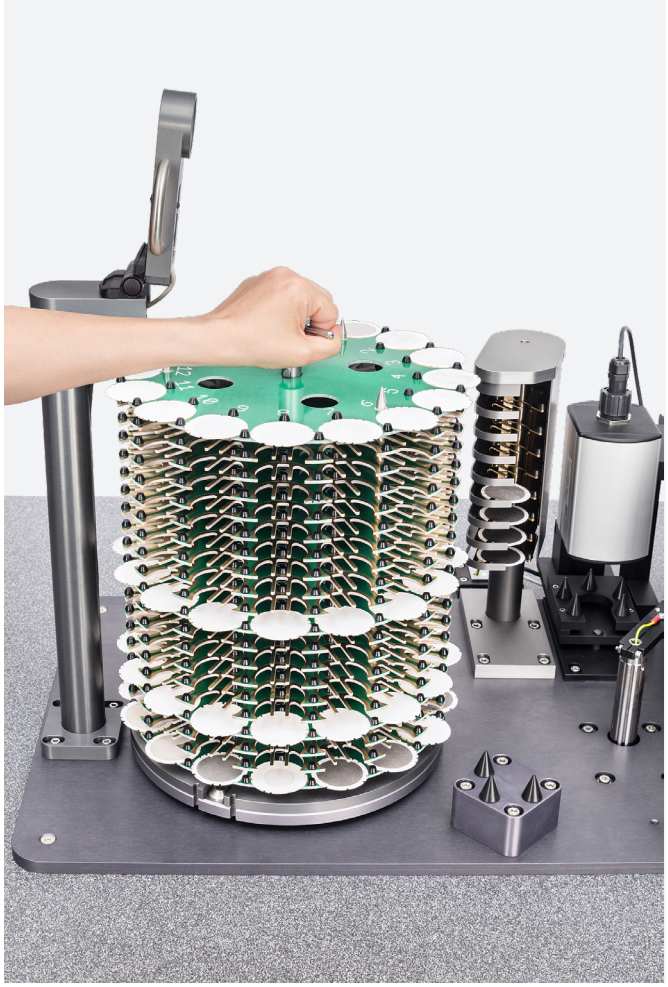

Removable filter magazine

Filter Magazine

The filter magazine, installed on a turntable, consist of up to 20 magazine discs with 16 filter positions each (diameter of the filters: 47 mm).
The magazine is driven gradually by a brushless servomotor with a coupled incremental encoder. The system‘s carrier fork automatically serves each of the up to 320 filter positions.
The 2.4 mm thick magazine discs are made of fiberglass reinforced epoxy resin (FR4). Similar discs are used in the manufacturing of printed circuit boards. The upper surfaces of the magazine discs are gold-plated. The gold-plated placing positions and cone contacts between the magazine discs prevent static charging. At the same time, the gold plating is used to equalize the electrical potential for all magazine discs.
The magazine is placed on the turntable without screw connection and can be easily removed and returned, as a whole, to load and remove the filters.

Microbalance

The system balance is a microbalance with a readability of 0.001 mg. The balance was modified mechanically to enable access by the carrier fork. These modifications have no influence on the technical data guaranteed by the manufacturer of the balance.
The integrable balance models mostly feature integrated weights for balance calibration. These are usually more accurate than external weights and preserve the calibration until the next annual calibration is performed by a service technician. Additionally, calibration supported by the system can also be executed using external weights.

Coding Station

An important requirement for ensuring an efficient and accurate automatic weighing process with data recording is the encoding and identification of the sampling filters.
Since the filters are 47 mm in diameter and the exposure area is 41 mm in diameter, an annular area 3 mm wide is available for marking. The AWS-1’s digitally controlled cutting device is used in a patented procedure to cut a binary code into this area at the edge of the filter.
Each marking is about 2 x 1.75 mm in size. The programming for these codes is handled by the filter marking software installed on the control and data recording PC.

Reading Station

The reading station identifies the filters that had previously

Automatic Weighing System AWS-1

System microbalance (example)

been encoded. For identification, the carrier fork moves the filters individually to the reading station. There they are laid on a support ring bounded by centering cones. The binary code applied to the edge of the filter is read by a digital vision sensor. The read-out code is stored in the memory of the PC used for control and data recording.

FFU and Climate Control Unit

The AWS-1 has to ensure defined ambient climatic conditions, such as temperature and humidity. The contamination with airborne particulate matter, which could lead to distortion of the weighing results, needs to be avoided. Therefore, the system is equipped with a closed weighing chamber with a fan filter unit (FFU).
The AWS-1 can additionally be equipped with an optional climate control unit. It automatically controls the temperature by heating and cooling. A highly reliable convection unit accurately controls the required relative humidity.
The climate control unit is very quiet and economical and has an excellent control behavior. Safety features include an overheating thermostat and an overflow protection. The system is also protected against dry-running.
An integrated climate control unit is not necessary if the AWS-1 is positioned in appropriate ambient conditions.

Carrier Fork (Filter Transportation Unit)

The handling system with carrier fork moves through the weighing chamber in rotatory and vertical movements. Combining both movement directions, it transports filters from and to various positions in the system (filter magazine, reference magazine, coding station, balance, reading station). All movements are executed automatically according to the preselected parameters.

Reference Magazine

During the SPM sampling process, sampling systems are often loaded with an additional blank filter (reference filter), which is not sampled, to detect a possible passive dust ingress into the system.
For storage of reference filters and reference weights, the AWS-1 features a reference magazine with eight placement positions. In the reference magazine, filters of different materials (e.g. Glass fiber, Quartz fiber or Teflon filters) can be stored after placement in a special mounting fixture for reference filters. By weighing those reference filters, a possible ingress of dust into the weighing chamber can be detected.

The material of the reference filters should correspond to the material of the filters used for sampling. The reference filters are changed together with the filters in the filter mag-

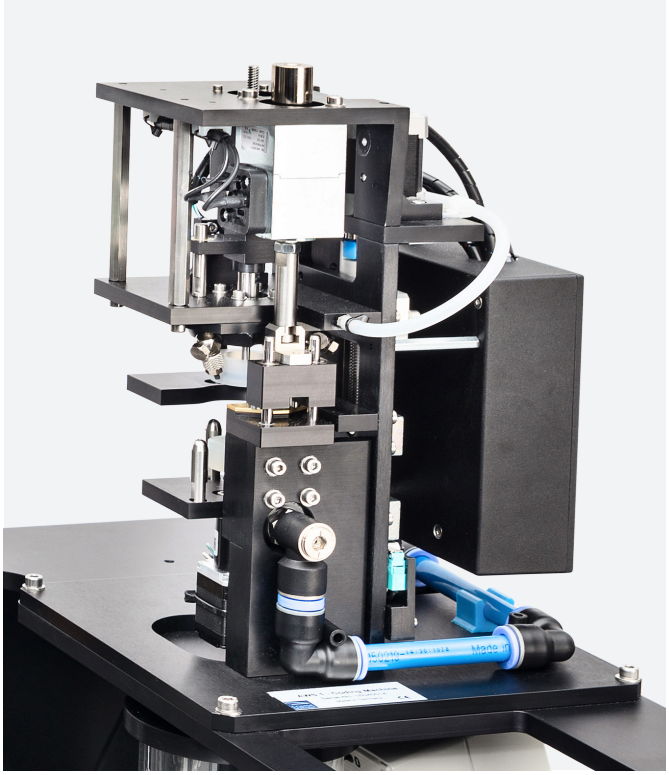

Coding station

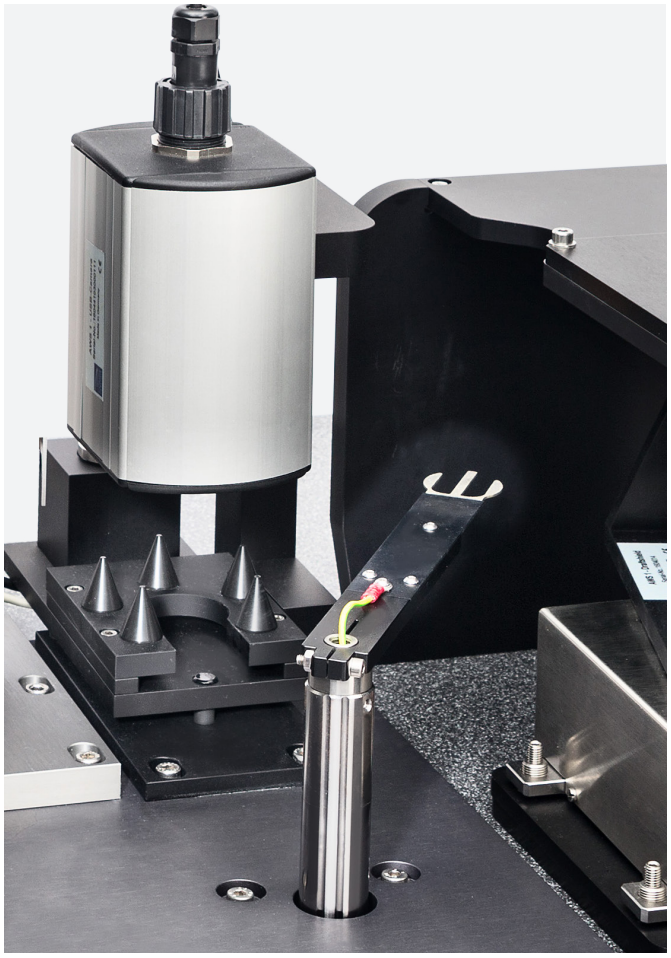

Reading station (left side) and carrier fork (bottom)

azine.

Sampling Filters

The following filter materials can be weighed with the AWS-1:

- Glass fiber filters
- Quartz fiber filters
- Cellulose nitrate filters
- Teflon filters

Evaluation and Documentation

The following values are recorded automatically by the system during the weighing process:

- Filter code
- Air temperature, rel. humidity and air pressure
- Conditioning period
- Filter positions in the magazine
- Date and time
- Mean weighing values before and after the sampling process

The stored data can easily be evaluated after weighing, e.g. using a spreadsheet application for postprocessing. Custom modifications regarding postprocessing can be provided as an option.

Main window of the *AWS Control* software

Automatic Weighing System AWS-1

Dimensions in mm

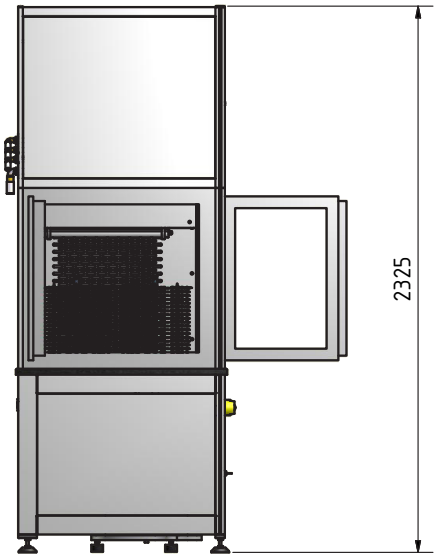

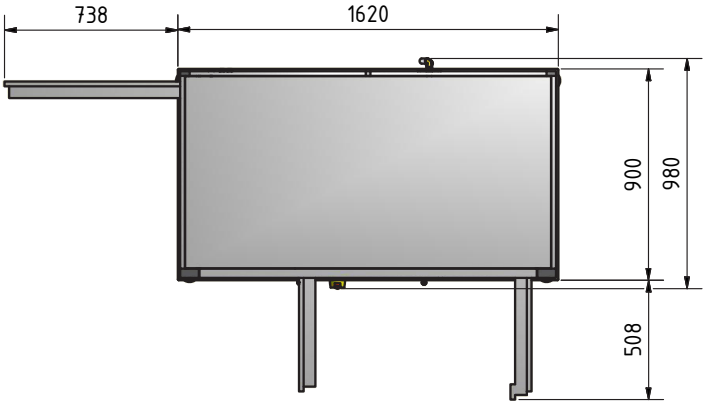

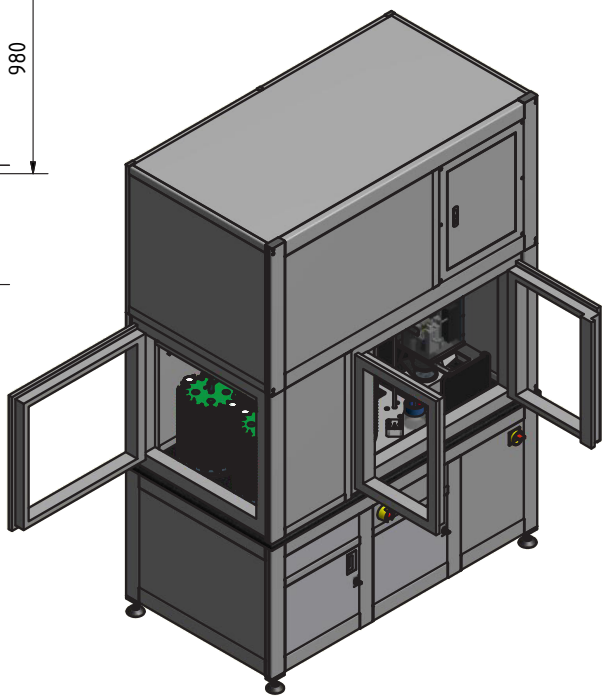

Phone: +49 3329 69027-10
Fax: +49 3329 69027-19

Comde-Derenda GmbH
Kieler Strasse 9, 14532 Stahnsdorf/Germany

info@comde-derenda.com
comde-derenda.com

Technical Data AWS-1

Filter magazines	
Number of magazine discs	20 max.
Number of filters on each magazine disc	16
Potential equalization	Through conical contacts between gold-plated magazine discs
Magazine drive system	Brushless, maintenance-free DC motor
Positioning of the magazine	Via incremental encoder

Filters and Filter encoding	
Filter material	Glass fiber, quartz fiber, cellulose nitrate, Teflon (without coding)
Filter diameter	47 mm
Filter marking (not available for Teflon filters)	Digitally controlled code cutting device (optional)
Position of marking	On filter edge
Dimensions of marking	2 × 1.75 mm
Type of marking	Binary code (approx. 129.000 possibilities)
Reader station	Intelligent image recognition system

Microbalance (optional)	
Integrable Models	Mettler-Toledo WXS26S/15, Sartorius WZA-26-HC (other models on request)
Reading precision (resolution)	0.001 mg
Maximum load	20 / 22 g
Location of the balance	Platform with a large mass (approx. 155 kg), decoupled
Calibration weights for weighing system	Integrated in the balance, additional external weights optional

Electronics	
Data output	RS-232
Data export (as CSV file, other data formats available on request)	Weight of unsampled filter (average), weight of sampled filter (average), difference of weight between unsampled and sampled filters (average), temperature, rel. humidity, barometric pressure, filter number, sampler number, date/time, amount of weighings per filter

Power Supply	

Dimensions and Weight	
Width	1620 mm
Height	2325 mm (working height 781 mm)
Depth	980 mm
Weight (incl. climate control unit)	< 800 kg
Weight external chiller for climate control unit	< 75 kg

Air Conditioning (optional)	
Temperature regulation	Air conditioning unit (heating and cooling) with water-based temperature control (ext. chiller)
Humidifier unit	Vaporator-air-condenser-unit
Operating conditions	15 ... 32 °C, 30 ... 60 % rel. humidity
Power consumption	approx. 2000 VA
Power consumption compressor	approx. 1300 VA

Ed. 2018-03

Phone: +49 3329 69027-10
Fax: +49 3329 69027-19

Comde-Derenda GmbH
Kieler Strasse 9, 14532 Stahnsdorf/Germany

info@comde-derenda.com
comde-derenda.com